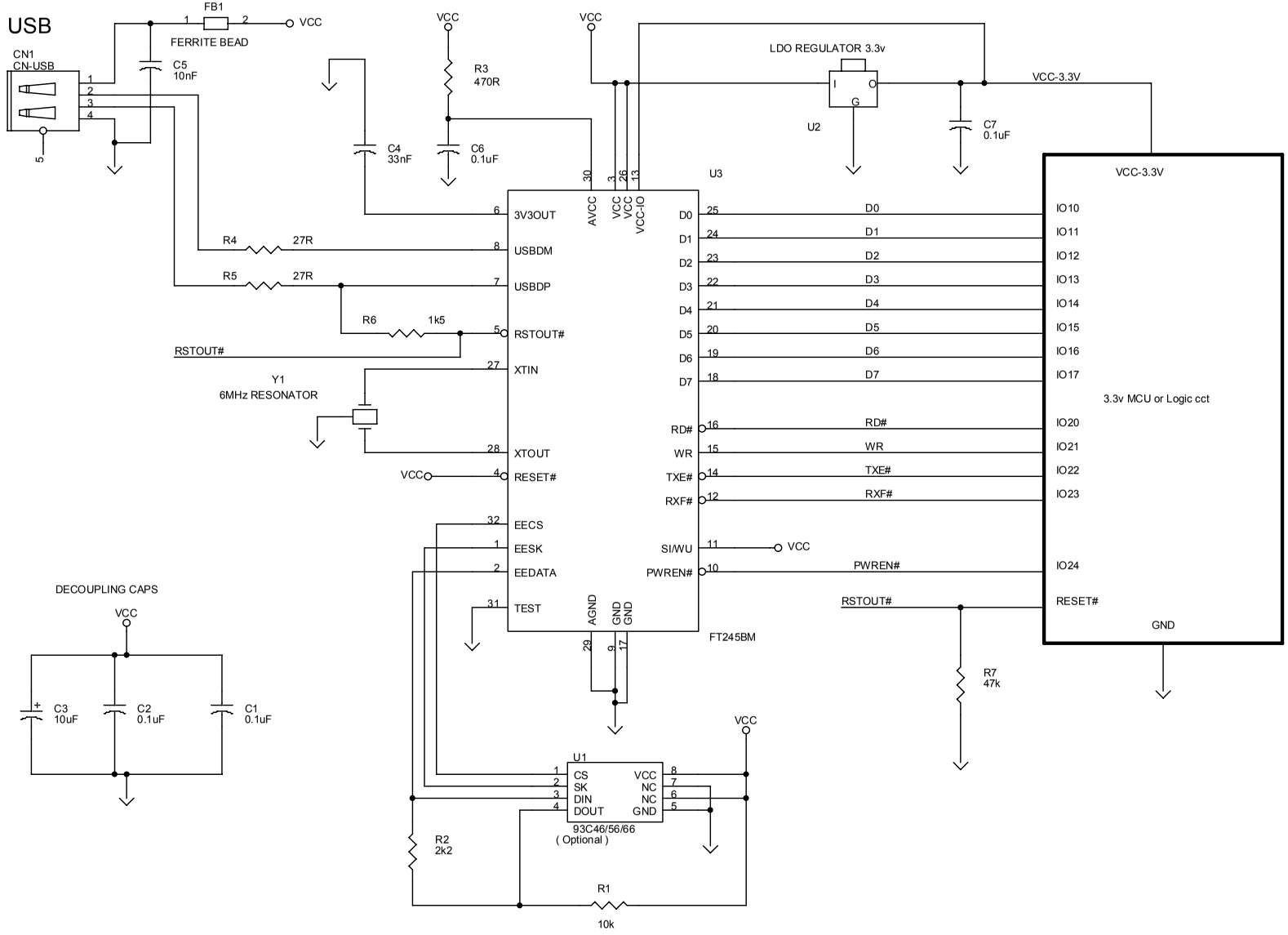
USB
CN1
CN-USB
FB1
FERRITE BEAD
VCC
C5
10nF
R3
470R
C4
33nF
C6
0.1uF
LDO REGULATOR 3.3v
U2
C7
0.1uF
VCC-3.3V
U3
3V3OUT
USBDM
USBDP
RSTOUT#
XTIN
XTOUT
RESET#
EECS
EESK
EEDATA
TEST
AVCC
VCC
VCC
VCC-IO
AGND
GND
GND
D0
D1
D2
D3
D4
D5
D6
D7
RD#
WR
TXE#
RXF#
SI/WU
PWREN#
FT245BM
R4
27R
R5
27R
R6
1k5
Y1
6MHz RESONATOR
IO10
IO11
IO12
IO13
IO14
IO15
IO16
IO17
3.3v MCU or Logic cct
IO20
IO21
IO22
IO23
IO24
RESET#
GND
R7
47k
DECOUPLING CAPS
C3
10uF
C2
0.1uF
C1
0.1uF
U1
CS
SK
DIN
DOUT
NC
93C46/56/66
(Optional)
R2
2k2
R1
10k